The Symbol of Excellence

SP Industries Inc.

Standard & High Density
Heavy Commercial / Light Industrial Dry Pack Compactors

Side Load Security Chute

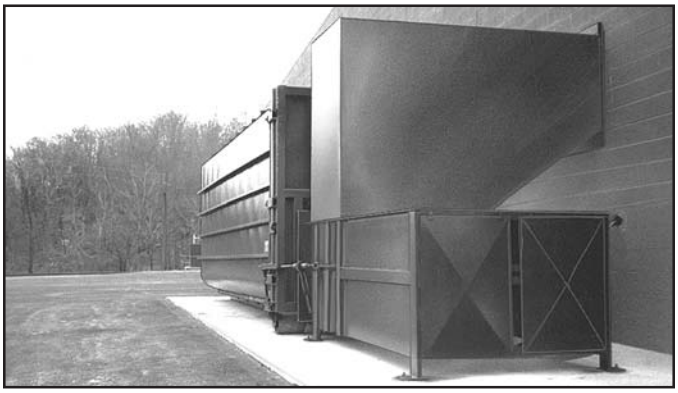

Walk-on Deck with Safety Handrails and Rear Load Hopper

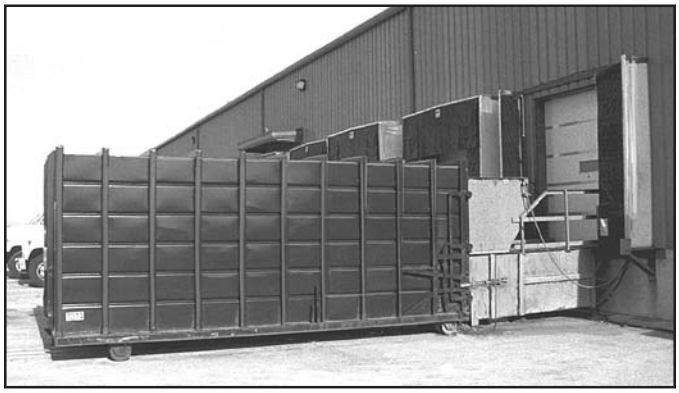

Model CP-3101 & 3101-HD 3 cu. yd. Stationary Compactors

- Reduce Hauling Costs - Compacting waste with a dual cylinder compactor means fewer trips to the landfill.
- Reduce Employee Labor - Use the compactor instead of your employees to break down large bulky refuse.
- Reduce employee pilferage with a security chute system.
- Meets or Exceeds Current ANSI Z245 Safety Standards for Stationary Compactors.
- Dry Pack, Forward Sloping Floor Design - Liquid waste runs into the container reducing unsightly and offensive liquid discharge behind the ram and under the compactor.
- Heavy Commercial/Light Industrial Construction for applications with 1 to 2 container pulls per week.
- Large 59″ x 57″ Clear Top Opening.
- Engineering services for system designs that meet your individualized needs.
- American Manufacturer Electrical and Hydraulic Components - Specified for dependability, serviceability and nationwide availability.
- Outperforms and outlasts all other stationary compactors in its class.
- Industry's leading Warranty
  Three Years Ram and Frame Weldment
  One Year Electrical and Hydraulic Components
  Parts and Labor

Printed On Recycled Paper

We Build Equipment the Old Fashioned Way — "WITH PRIDE"

Specifications CP-3101 & 3101-HD

Compactor Model	Mrf's Rating (cu. yds.)	WASTEC Type Rating (cu. yds.)	Clear Top Opening (In.)		Chamber Length (In.)	Ram Stroke (In.)	Ram Penetration (In.)	Force Rating (Ram PSI at stated forces lbs.)		Hydraulic Syst. Pressure PSI		Ram Face (in.)		Volume Displacement (cu yds per hr)	Motor H.P.	Cycle Time (sec.)	Discharge Opening (in.)			Base Unit Weight (lbs.)
			Length	Width				Normal	Maximum	Normal	Max.	Width	Height				Width	Height	From Gnd.	
CP-3101	3	2.03	59	57.6	60	74	14	32.2/50,900	35.8/56,500	1800	2000	59.5	26.5	149	10	49	61	33	16	6,050
CP-3101-HD	3	2.03	59	57.6	60	74	14	44/69,300	48.8/77,000	1800	2000	59.5	26.5	106	15	69	61	33	16	7,450

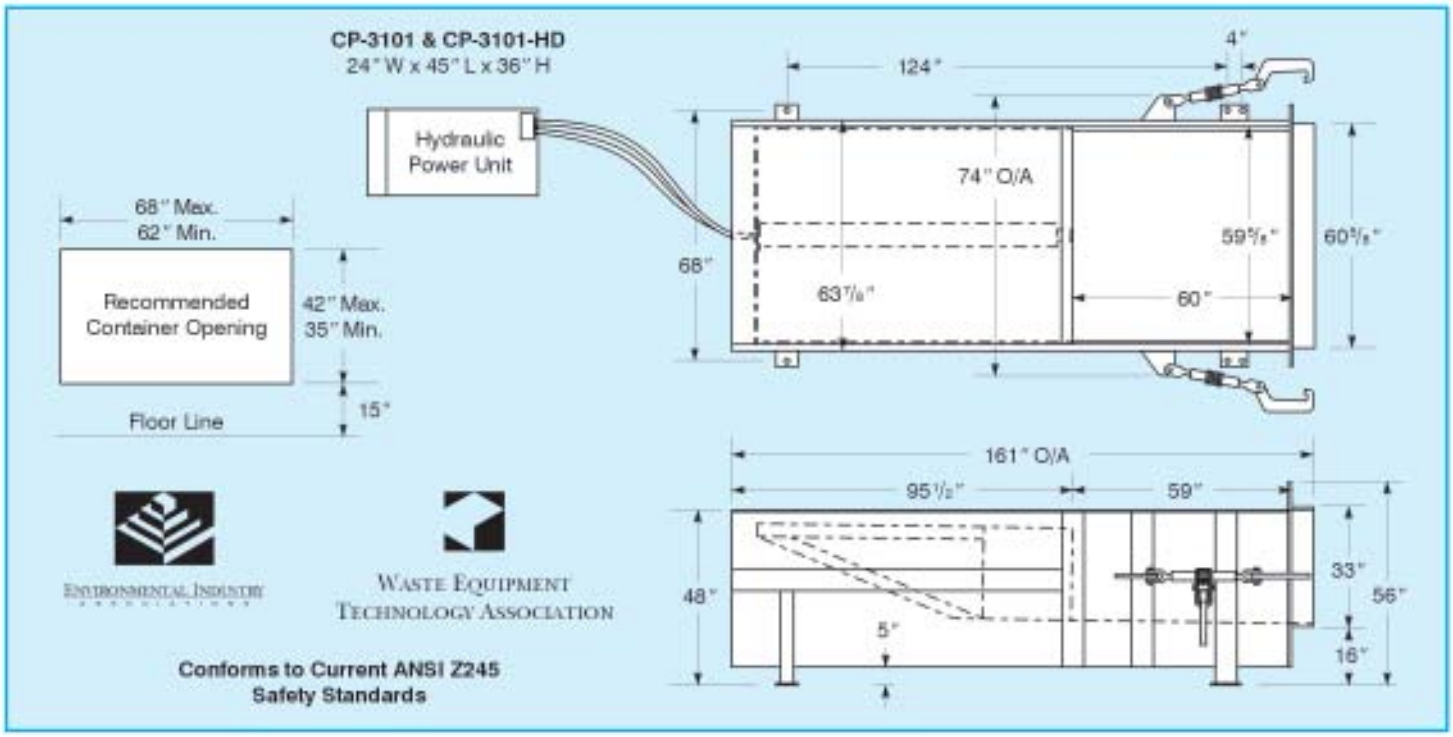

Standard Features

- Frame: Floor Work Hardening Steel Plate 3/8″
  - Floor Supports (7) C4 x 5.4#
    (1) C6 X 13#
  - Side Plates: 3101 - 3/16″, HD - 1/4″
  - Side Supports (3) 6 x 13#
  - Breaker Bar: 3101 - L8″ x 6″ x 1″
    HD - 1-1/2″ x 8″ Vert. & 1″ x 5″ Hrz. Bar
- Ram: Face Plate 3/4″
  - Floor Plate 5/8″
  - Side Plates 3/16″
  - Top Plate 1/4″
  - Top Supports (7) C4 x 5.4#
  - Guides Adjustable Nylatron Blocks
- Removable Access Panels
- Weatherhood/Safety Panels
- Ratchet Binder/Hooks: 90,000# Capacity
- Remote Power Unit
- Reservoir: 40 Gallon Capacity
- Oil - Suitable for Wide Temperature Range
- Oil Sight Gauge w/Thermometer
- Pump: 16 GPM,
  Constant Displacement Vane Type
- Cylinder:
  CP-3101 - 6″ Bore x 4.5″ Rod x 74″ Stroke
  CP-3101-HD - 7″ Bore x 4.5″ Rod x 74″ Stroke
- UL Listed Electrical Components
- Motor: CP-3101 - 10 HP Tri-Volt 3 PH
  CP-3101-HD - 15 HP Tri-Volt 3 PH
- Controls In Main Panel:
  - Automatic Multicycle
  - Automatic Safety Retract
  - Automatic/Manual Selector Switch
  - Ram Position Switch
  - Full/Jam Automatic Shut-off w/Indicator
  - Key Lock On/Off Switch
  - Pull-To-Start/Emergency Push-To-Stop Button

Standard Power Unit

Optional Features

- Decks 750# & 10,000# Capacity
- Safety Handrails
- Safety Gate w/Interlock
- Side or Rear Load Hopper
- Enclosed Hopper w/Door
- Security Chute (Side or Rear)
- Full Enclosure
- Safety Interlock System
- Deodorizer Spray System
- UL Certified Panel
- Photo Electric Start System
- Keyed Pinning/Boost Override System
- Advance Full Load Indicator
- TEFC Motor
- Low Oil Indicator with Shut-off
- Thermo Oil Heater
- Power Unit Weather Cover
- Container Guide
- Through Wall Ratchet Kit

Ask Your Local Dealer For Additional Options

!CAUTION! This equipment Should Be Operated By Properly Trained Personnel. Improper Use, Misuse or Lack of maintenance could cause injury to people and/or property. Photos used in this brochure are illustrative only. Due to its commitment to quality, SP Industries' specifications are subject to change without notice to accommodate improvements to its equipment. Information contained within this literature is intended to be the most accurate available at the time of printing.

Distributed by:

SP Industries Inc.

SP Industries, Inc.
2982 Jefferson Road
Hopkins, MI 49328
www.sp-industries.com

Phone: 800-592-5959
In Mich.: (269) 793-3232
Fax: (269) 793-7451
E-mail: info@sp-industries.com